Introducing Furmanite's engineered composite repair technology

Dr Paul Hill CEng

Director – Furmanite Center of Excellence

Composite Repairs

Furmanite

Operating in Over 40 Countries

1800+ Employees

Turnover $300M

Corporate Headquarters:
Furmanite Worldwide Inc.
2435 North Central Expressway
Suite 700
Richardson
TEXAS
75080
USA
Tel: 001 972 699 4000

Furmanite America.
101 Old Underwood Road
La Porte, TX

Furmanite International Ltd
Furman House
Kendal LA9 6RU
UK
Tel: +441539 729009
Email:
salesuk@furmanite.com

On-site services

- Leak sealing
- Pipeline intervention
- Valve repair
- Composite repair
- In-situ machining
- Trevitest valve testing
- Heat treatment
- Metal disintegration
- Controlled bolting/PSIM
- SmartShim
- FurmaSeal clamps
- Passive fire protection

Furmanite
composite repair specialists

At the forefront of composite repair development and technology

Strengthening of metallic bridges

Ship Repairs

Train Repairs

- Corrosion of side pillars around door pockets
- Corrosion of sole bars
- Bonded repair schemes completed

Furmanite-composite repair for pipes

- First composite pipe repair trials with carbon fibre in 1994
- Developed service based on compliance with industry standards
- Objective to provide auditable support to repairs installed – from validation testing to installation on site
  - We “own” the whole process

Designed for purpose composite repair technology

- Returns plant and equipment to maximum operating pressure
- Restores full structural integrity
- Is applied on-line
- Provides a real alternative to costly unscheduled shutdown or replacement
- Extends life of critical plant and equipment
- Can be installed on live lines, taking work outside of shutdown

Photos show repair on a 30” to 4” tee. Stabilised crude line

Furmanite composite repair technology – the benefits

- Repairs are fully engineered
- No hot work required
- No interruption to plant operation
- Repairs can last life of plant
- Lightweight repair kits are easy to transport and handle (even via rope access)
- Repairs are close fitting and can be applied in confined spaces

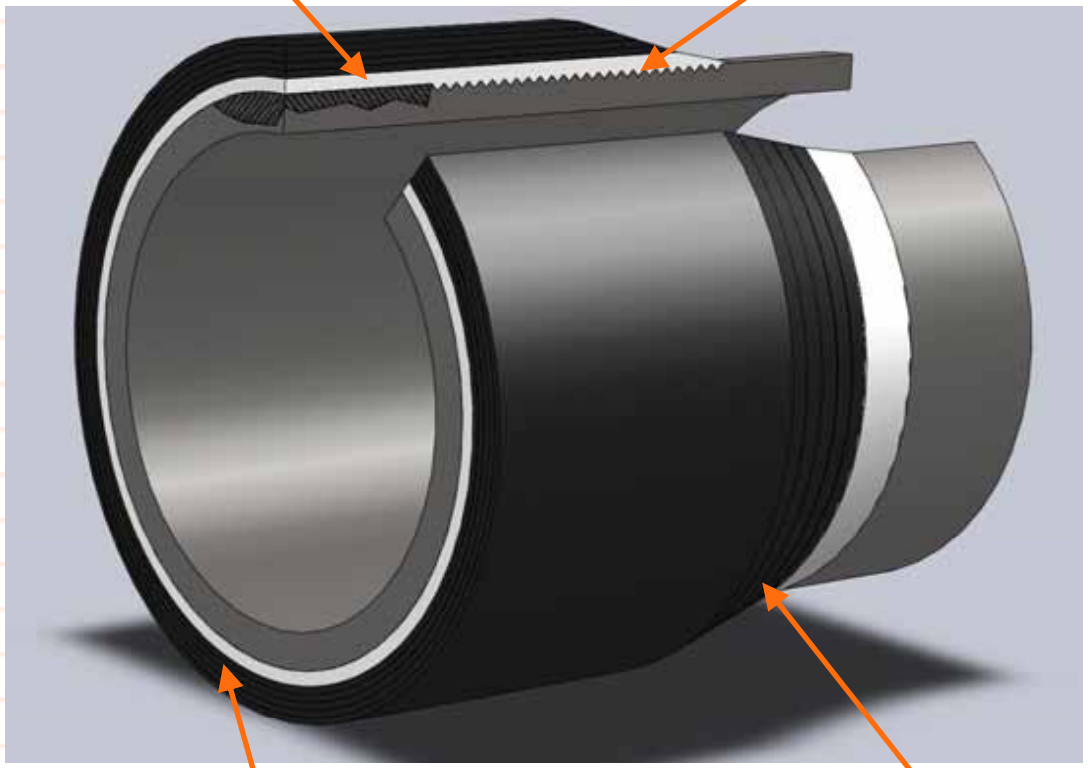

Dedicated technology – meeting demands safely and effectively

FurmaFast
EMERGENCY REPAIR KIT

- The emergency repair contingency solution

FurmaGlass
LOW PRESSURE COMPOSITE REPAIR

- The low pressure strengthening and repair option

FurmaWrap
COMPOSITE STRENGTHENING

- For straightforward, compliant strengthening repairs

FurmaCarbon
HI-PRESSURE COMPOSITE REPAIR

- The high pressure strengthening and repair technology

FurmaFast
EMERGENCY REPAIR KIT

- Keep it in stock to deal with unexpected leaks
- Quick and simple to install, high performance temporary repair
- Gives you time to implement a longer term strategy
- Cost-effective – six kit sizes available for pipe diameters from ½” to 6”
- We’ll train your team to use it

FurmaFast bonds to all pipe materials and is resistant to many chemicals

FurmaFast
EMERGENCY REPAIR KIT

- Stop the flow e.g. by using Furmanite Leak Mitigation products
- Plug leak with epoxy putty
- Immerse wrap in cool water then wrap pipe tightly
- Smooth resin around tape and massage until hard
- Re-pressurise pipe after 30 mins

Recommended for pressures up to 20 bar (300 psi)

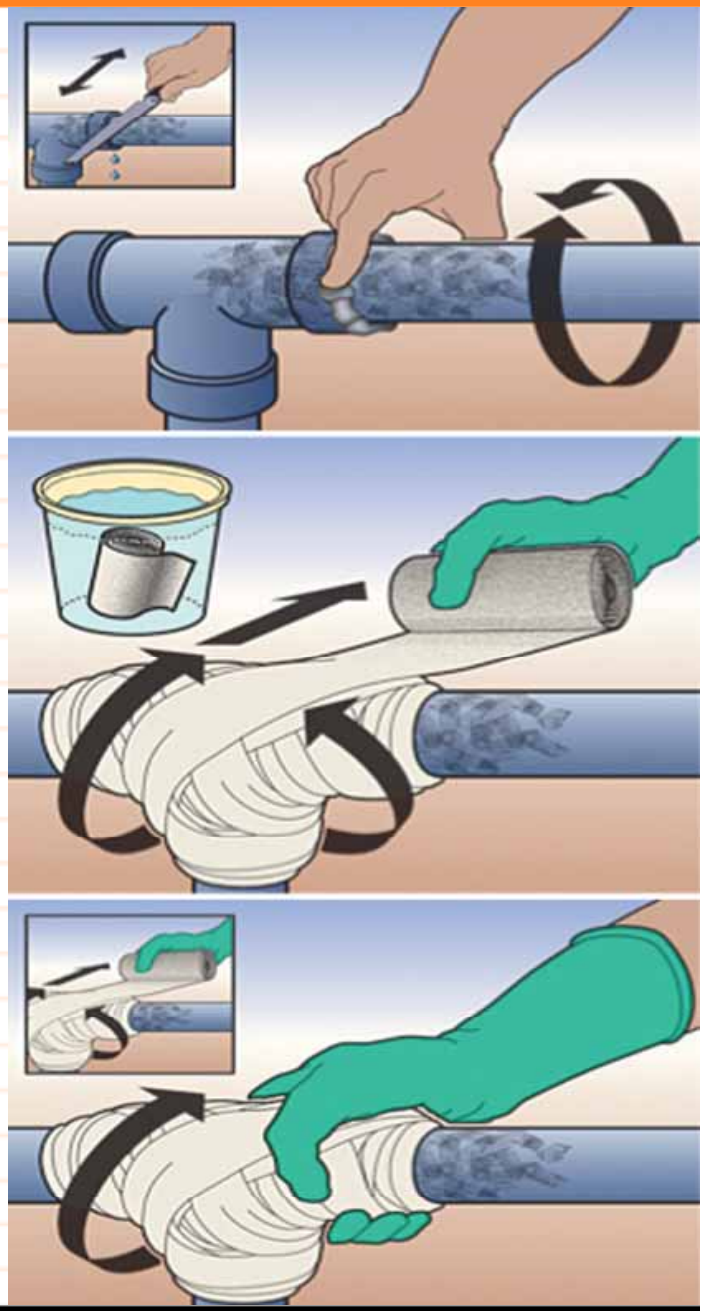

FurmaFast - on-site and available for when you need it most

FurmaWrap
COMPOSITE STRENGTHENING

- Designed to strengthen and/or repair pipes where defects are not leaking
- Ideal where corrosion has reduced wall thickness below minimum allowable
- Can be used in splash zones, underwater and on wet surfaces
- Available in range of widths and lengths to suit pipe sizes and defects
- Validated in accordance with ISO TS 24817 and ASME PPC-2 Article 4.1

FurmaWrap
COMPOSITE STRENGTHENING

- Simple to use, pre-impregnated, glass fibre reinforced, structural repair system
- Ideal for repairing external corrosion
- Installation takes typically 20 - 30 minutes and a cure time of just 2 hours
- Saves time and money

Structural repairs that can be applied in challenging environments

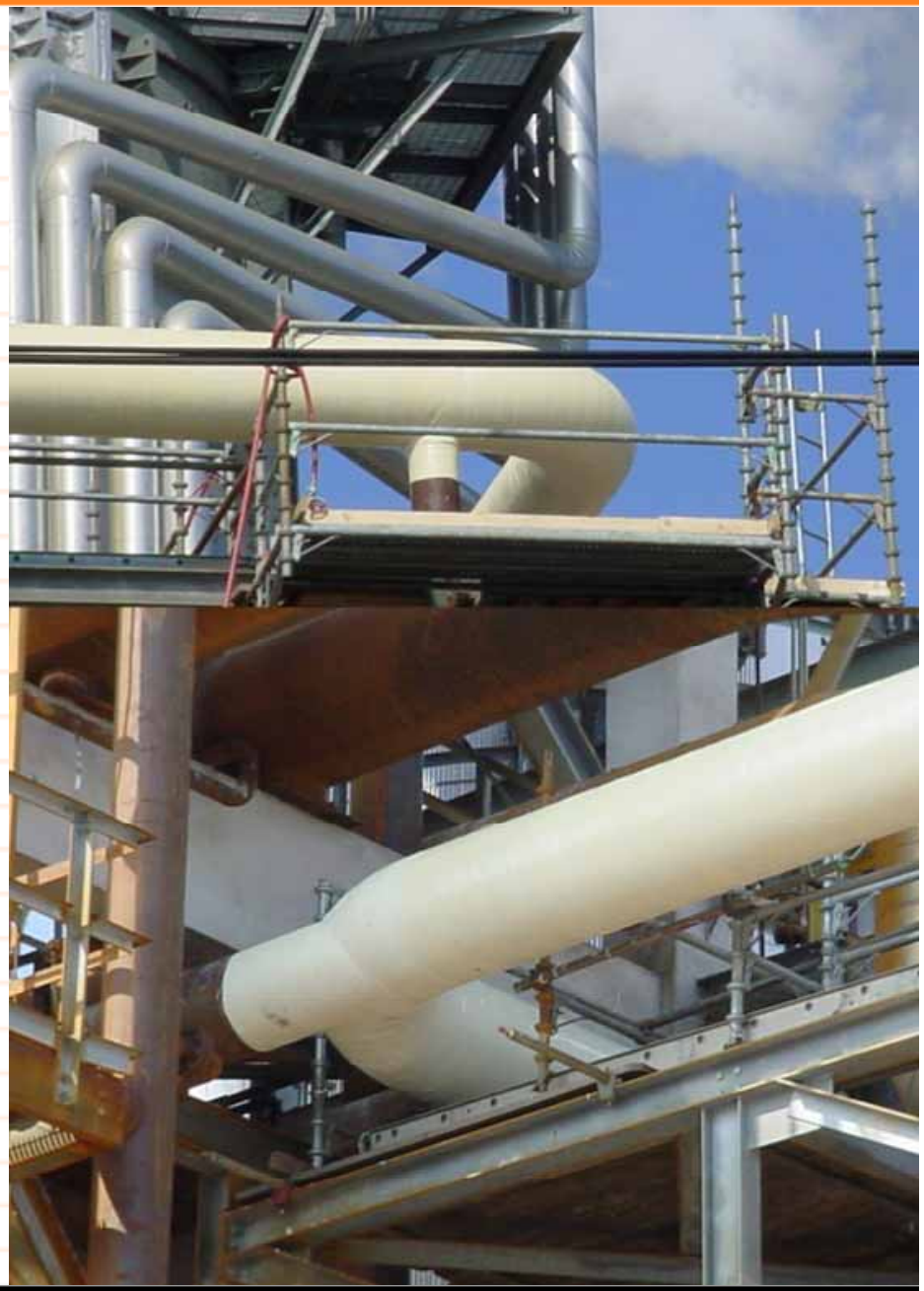

FurmaWrap
COMPOSITE STRENGTHENING

Repair of continuous lines

- Strengthens corroded lines, and prevents further damage
- Can be applied in demanding conditions
- Simple application technique minimises time on site
- Can be applied in wet conditions and in splash zones

FurmaGlass

LOW PRESSURE COMPOSITE REPAIR

- Designed for repair and strengthening of pipes with through-wall damage
- The strength and stiffness of the glass fibre reinforcement makes this ideal for lower pressure or smaller diameter lines
- Suitable for flat surfaces, tank walls, tank floors, pipes, tees, reducers, elbows, etc
- Supplied in accordance with ISO TS 24817 and ASME PCC-2 Article 4.1

Recommended for pressures up to 20 bar (300 psi)

FurmaGlass

LOW PRESSURE COMPOSITE REPAIR

Low pressure lines

- Pinhole leaks along full length of line
- Continuous repairs in excess of 100m (330') length

FurmaGlass
LOW PRESSURE COMPOSITE REPAIR

FurmaWrap
COMPOSITE STRENGTHENING

Corrosion protection in aggressive service

- Materials provide a robust barrier against corrosion
- Provide excellent protection where pipes enter ground
- Optimum solution depends on degree of corrosion to be repaired

FurmaGlass

LOW PRESSURE COMPOSITE REPAIR

Structural repairs

Furmanite has the engineering expertise and the capability to repair corroded structures, such as

- Decks
- Coating of tank bottoms
- Strengthening connections

External corrosion:

'The hidden threat'

- Very common to find corrosion
  - under pipe supports
  - under insulation and lagging, and other 'hidden' areas
- Wide range of hidden problems in plants and refineries
- Repairs restore integrity of lines and prevent further degradation
- Supports and insulation can be reinstated on top of the composite

Photos show 24" Oil Line with External Corrosion. Wall thickness below minimum allowable

Corrosion under pipe supports

- Significant external corrosion visible
- Wall thickness reduced to below the allowable minimum
- Composite restores integrity and prevents any further degradation
- Solution selected based on design pressure and degree of damage

FurmaCarbon

HI-PRESSURE COMPOSITE REPAIR

- High performance option for repair and strengthening where damage is through-wall
- Ultimate strength and stiffness of carbon fibre enables applications from 10 bar (150 psi) to over 200 bar (3000 psi)
- High bond strength and chemical resistance
- Tested to prove long term suitability for pipeline repair
- Ideal for local repair, renovation of entire lines or even corrosion protection

Photos show leaking threads on connection between surface and lower casing head, 80bar (1160psi), 40℃ (104F)

FurmaCarbon

HI-PRESSURE COMPOSITE REPAIR

- Short or long term life (2 – 20 years)
- Onshore or offshore application
- Demonstrably reliable
- Engineering by experienced team
- Designed to meet all your needs
- Suitable for complex geometries
- Broad temperature/pressure spectrum

High integrity on-site repairs – designed for purpose

FurmaCarbon
HI-PRESSURE COMPOSITE REPAIR

Pipeline Repair

- Extensive experience with both gas and oil lines
- Repairs supported by long term testing on buried lines
- Repairs can be applied to live lines, and ensure no disruption to supply
- Repairs designed to conform with pipeline and composite repair requirements
- Control in approach provides confidence to employ technique

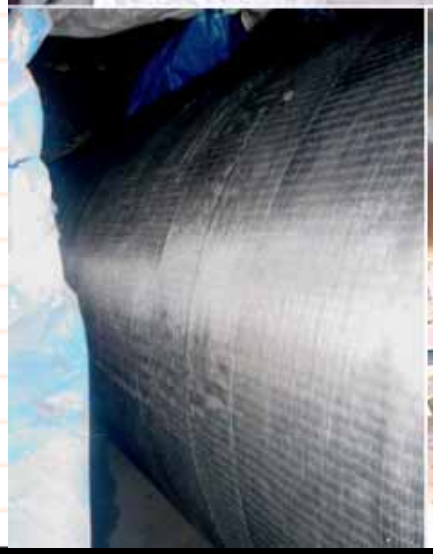

FurmaCarbon
HI-PRESSURE COMPOSITE REPAIR

Hydrocarbon export line

- Repairs completed to:

  - oil and gas lines

  - elbows, tees and take-offs

- Repairs accepted as permanent solution

- Full engineering support package required to support this

  - Finite Element Analysis

  - test specimens prepared on-site as part of QA package

The repairs removed the many risks associated with a cut-out and replace scope

FurmaCarbon

HI-PRESSURE COMPOSITE REPAIR

30” stablised crude line

- Significant dent at girth weld
- Repair had to be able to reinforced in both hoop and axial directions
- Long term performance has been demonstrated by accelerated fatigue tests

FurmaCarbon
HI-PRESSURE COMPOSITE REPAIR

Cooling water system

- Entire systems can be repaired
- More cost-effective than removing and replacing long lines
  - 60” main cooling water line leading into refinery
  - 75m (250’) length repaired – the full run of the line
- The threat of shutdown and costly replacement avoided

FurmaCarbon
HI-PRESSURE COMPOSITE REPAIR

Cooling Water Headers

- Internal and external corrosion along 50m (164') of length resulting in two through-wall defects and general wall thinning
- Repair applied over entire length

FurmaCarbon
HI-PRESSURE COMPOSITE REPAIR

Tank and vessels:

Furmanite's experience includes

- Storage tanks
- Process vessels
- Separators

FurmaCarbon
HI-PRESSURE COMPOSITE REPAIR

Power Generation:
Cooling water systems

- Repairs suitable for graphitisation in cast iron lines
- Example shows a 10” to 18” cast iron cooling water system
- Entire system repaired on line
- Traditional replacement required a four month outage

Offshore repairs

Furmanite's experience includes:

- Cooling water systems
- Fire water systems
- Oil export headers
- Utility lines
- Drains
- Sump tanks
- Caissons
- Separators
- Deck repairs
- Splash Zones

'If it's corroded we'll undertake the repair while trying to avoid shutdown'

FurmaCarbon
HI-PRESSURE COMPOSITE REPAIR

High pressure water injection lines

- 24” straights and 180° elbow
  - 209 bar (3000psi) design pressure
  - Internal corrosion to 3mm (1/8”)
- 10” injection manifold
  - 167barg (2420psi) operating pressure
  - Applied to prevent catastrophic failure

FurmaCarbon
HI-PRESSURE COMPOSITE REPAIR

Flare lines

- Extended lengths can be repaired, no need to remove lines
- Internal and external corrosion

FurmaCarbon

HI-PRESSURE COMPOSITE REPAIR

Fire Water Mains and Sea Water lines

- Steel, stainless steel and copper nickel lines have been repaired
- Entire systems covered (more than 40m (130') in length)
- Includes fittings, flanges, tees, reducers, etc
- Avoids replacement and costly shutdown

FurmaCarbon

HI-PRESSURE COMPOSITE REPAIR

Fire Water Mains

Caisson repairs

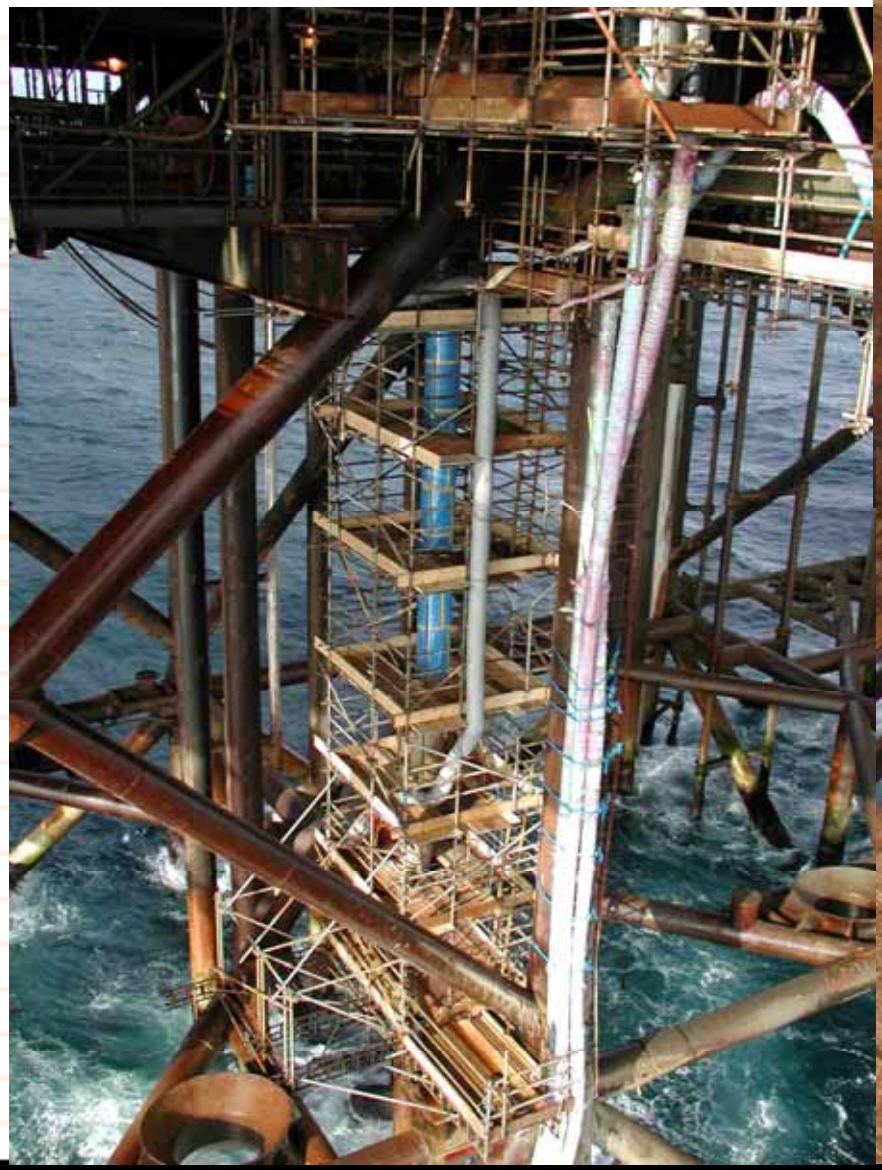

The repairs carry both the structural and pressure loads with no contribution from the original line

Effective repair technology designed for purpose

- Returns plant and equipment to maximum operating pressure
- Restores full structural integrity
- Real alternative to costly shutdown or replacement
- No loss of pressure while work is being carried out on line
- Particularly effective in hazardous environments - no hot work
- Fully compliant with regulatory requirement

'Composite repairs have a valuable role to play in planned plant upgrades as well as emergency repairs – often representing major cost savings and resulting in plant life extension'

• CHOICE ✓ • CONTROL ✓ • COMPETENCE ✓ • CAPABILITY ✓

Fumanite's engineered composite repair technology

Dr Paul Hill CEng

Director – Furmanite Center of Excellence

Composite Repairs